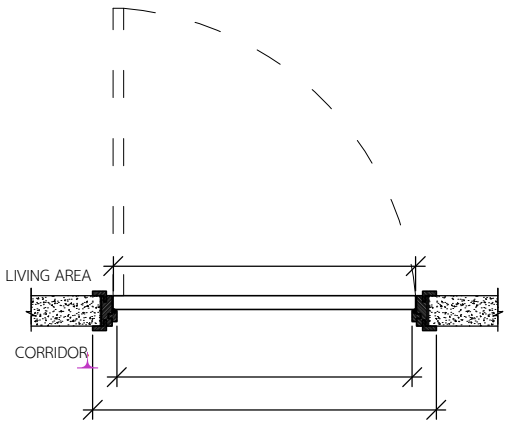

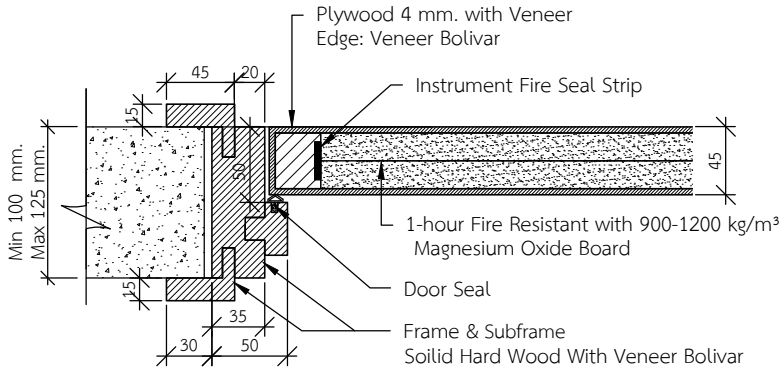

D01 DETAIL A4
SCALE 1:5

D01 Entrance

Door Details	Sizing	45mm Thickness
	Door Structure	Solid wood Ripping with Instrument Fire Seal Strip
	Door Core	1-hour Fire Resistant With (900-1200 kg/m³) Magnesium Oxide Board
	Door Face	Veneer 52.055 Bolivar by SiamWoodland
	Door Finishing	Stain Color Matt70% Gloss30%
	Door Edge	Veneer 52.055 Bolivar by SiamWoodland
Frame Details	Size	50x100 with Adjustable Subframe
	Material	Soilid Hard Wood with Density 800kgs/M3
	Cover	Veneer 52.055 Bolivar by SiamWoodland
	Finishing	Stain Color Matt70% Gloss30%

ให้ผรม นำเสนออุปกรณ์ที่ Support เรื่องการกันไฟ โดยเฉพาะตัวนี้ ที่ต้องการมีการตัด intrumescent strip ที่ทำหน้าที่กันควันเวลาไฟไหม้ออกไปเยอะ เพื่อติดตั้ง

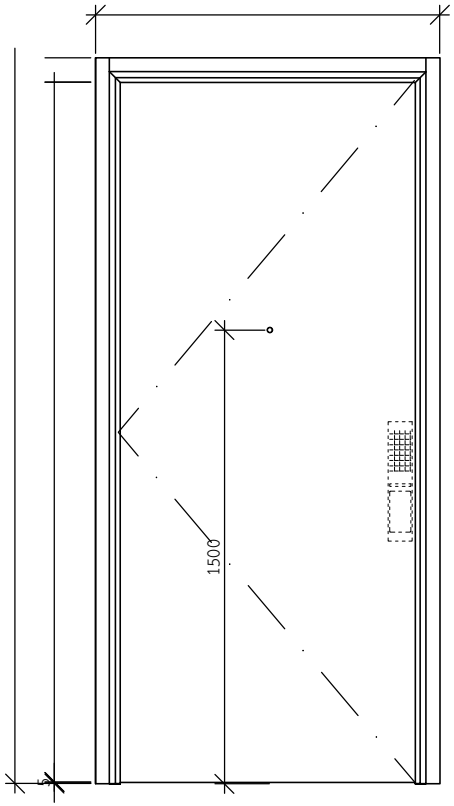

1	927.91.951	CONCEAL HINGH ALU BL TOP	1 PC	
2	927.91.952	CONCEAL HINGH ALU BL BOTTOM	2 PC	
3	931.84.269	CONCEALED DOOR CLOSER DCL33 H/O ARM	1 PC	
4	PP8100	PP8100 PUSH AND PULL WITH BLE	1 PC	
5	959.00.138	DR.VIEW W/CAP 180D BR.BL MATT	11 PC	
6	959.07.717	DOOR SEAL PL.BROWN	6 M	
7	938.30.033	MAGN.DOOR STOPPER STST.BLACK MATT	1 PC	
8	950.05.914	DR.SEAL AL.SILVERC. 1030MM	1 PC	

D01 = 605 set

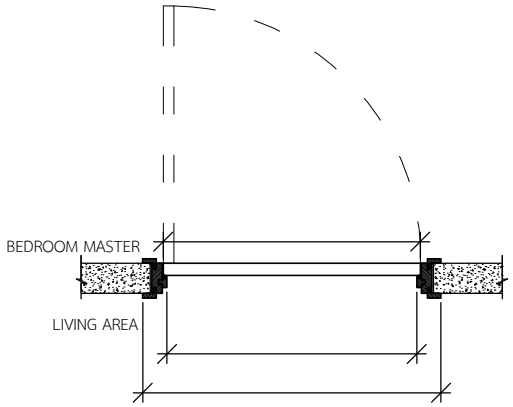

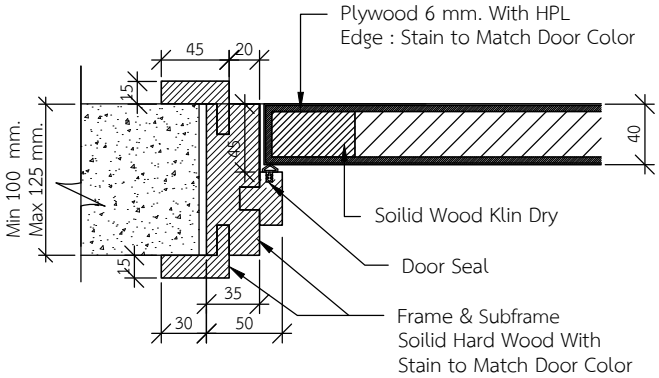

D02 DETAIL A4
SCALE 1:5

D02 Bedroom

Door Details	Sizing	40mm Thickness
	Door Structure	Solid Wood Klin Dry
	Door Core	sound absorbency material
	Door Face	6 mm. Plywood
	Door Finishing	High Pressure Laminate
	Door Edge	Stain to Match Door Color
Frame Details	Size	50x100 with Adjustable Subframe
	Material	Soilid Hard Wood with minimum 800kgs/M3
	Finishing	Stain to Match Door Color

TBC brand and pattern later

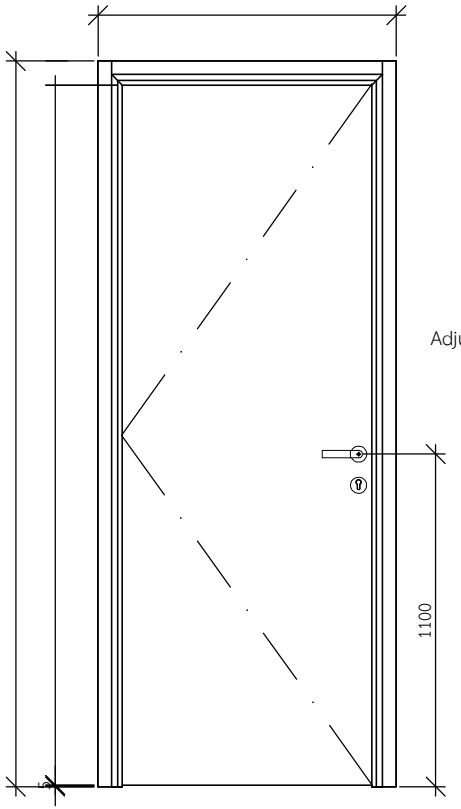

1	926.60.706	BUT.HIN.STST.BL.MAT.102x76x2MM 2BB	4 PC	
2	911.83.686	PC ENT. HDL SET 8 STST.BLM	1 SET	
3	950.07.717	DOOR SEAL PL.BROWN	6 M	
4	938.30.033	MAGN.DOOR STOPPER STST.BLACK MATT	1 PC	

D02 = 1,049 set

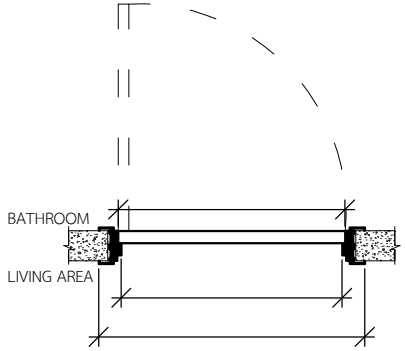

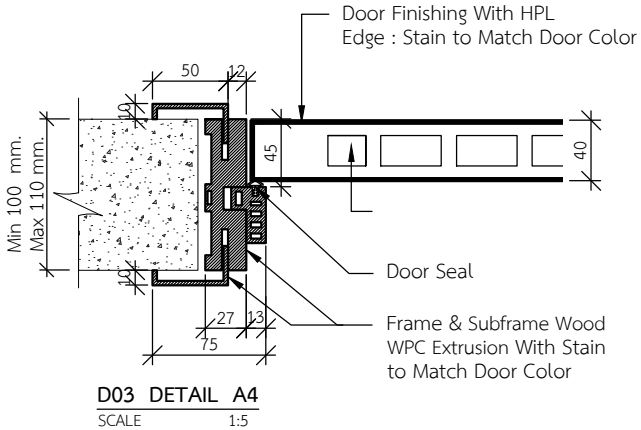

D03 DETAIL A4
SCALE 1:5

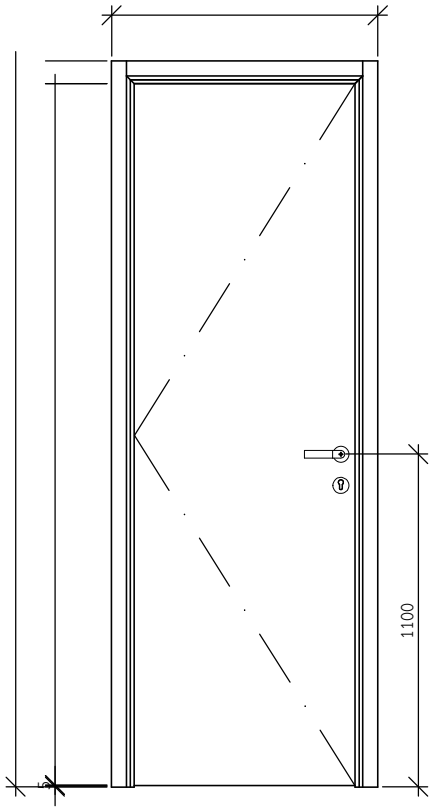

D03 Bahtroom		
DOOR DETAILS	Sizing	40mm Thickness
	Door Structure	WPC
	Door Core	WPC
	Door Finishing	High Pressure Laminate
	Door Edge	Stain to Match Door Color
Frame Details	Size	40x100 with Adjustable Subframe
	Material	Wood WPC Extrusion
	Finishing	Stain to Match Door Color

TBC brand and pattern later

1	926.60.706	BUT.HIN.STST.BL.MAT.102x76x2MM 2BB	4 PC	
2	911.83.687	PC WC. HDL SET 8 STST.BLM	1 SET	
3	950.07.717	DOOR SEAL PL.BROWN	6 M	
4	937.13.583/L 937.13.593/R	FRAME MOUNTED DOOR STOP (DIN Left-Right)	1 PC	

D03 = 1,328 set

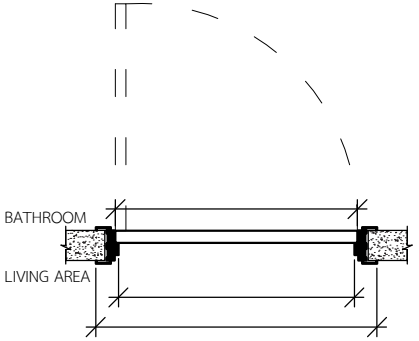

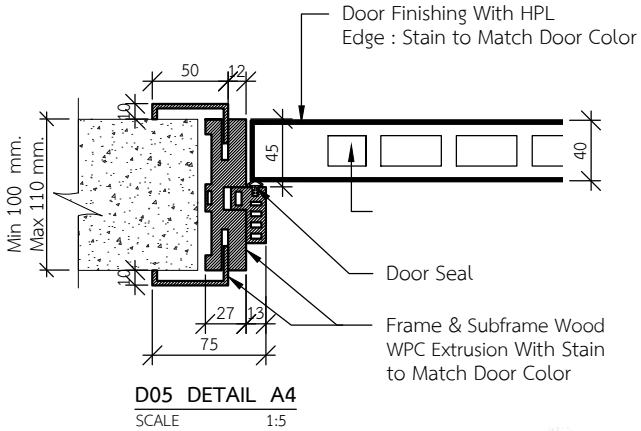

D05 DETAIL A4
SCALE 1:5

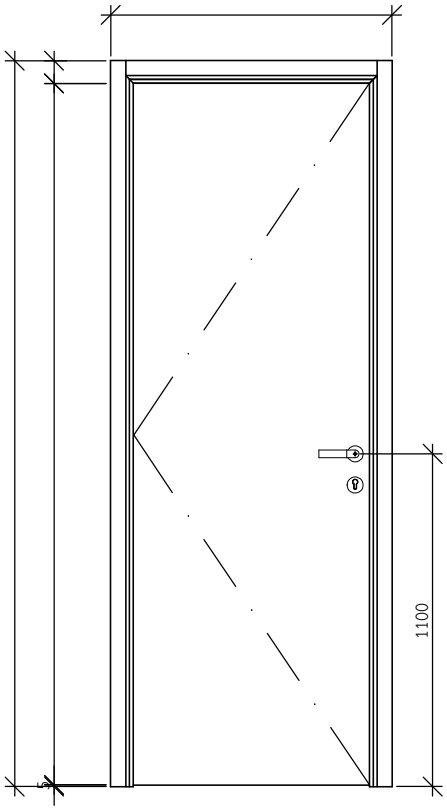

D05 Bahtroom

Door Details	Sizing	40mm Thickness
	Door Structure	WPC
	Door Core	WPC
	Door Finishing	High Pressure Laminate
	Door Edge	Stain to Match Door Color
Frame Details	Size	40x100 with Adjustable Subframe
	Material	Wood WPC Extrusion
	Finishing	Stain to Match Door Color

TBC brand and pattern later

1	926.60.706	BUT.HIN.STST.BL.MAT.102x76x2MM 2BB	4 PC	
2	911.83.687	PC WC. HDL SET 8 STST.BLM	1 SET	
3	950.07.717	DOOR SEAL PL.BROWN	6 M	
4	937.13.583/L 937.13.593/R	FRAME MOUNTED DOOR STOP (DIN Left-Right)	1 PC	

D05 = 216 set

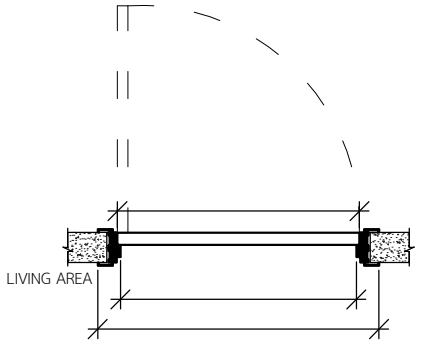

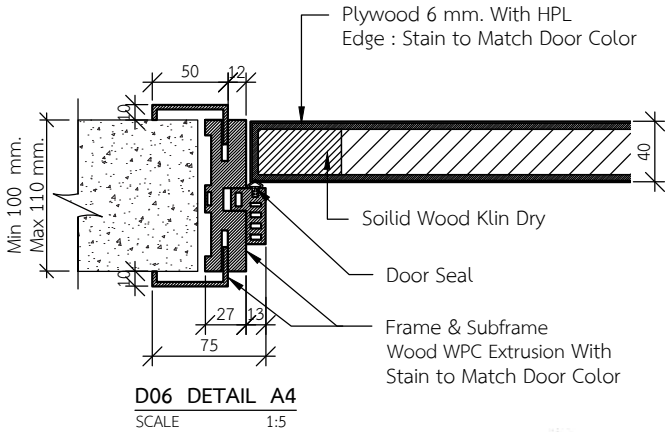

D06 DETAIL A4
SCALE 1:5

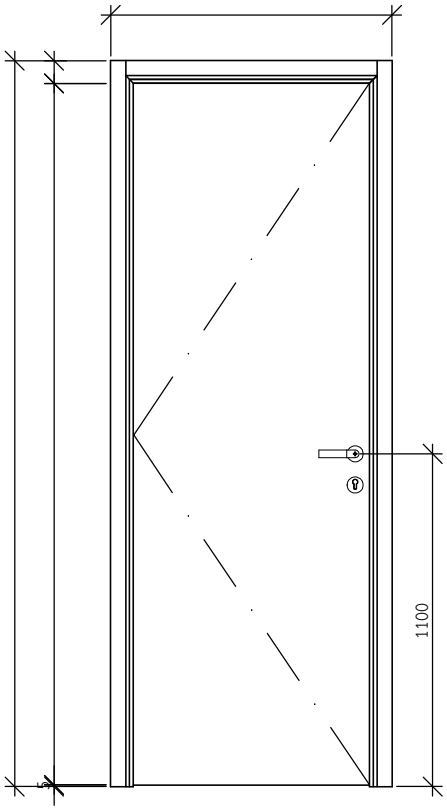

D06 Service(kitchen,Storage,Maid)

Door Details	Sizing	40mm Thickness
	Door Structure	Solid Wood Klin Dry
	Door Core	Hollow core
	Door Face	6 mm. Plywood
	Door Finishing	High Pressure Laminate
	Door Edge	Stain to Match Door Color
Frame Details	Size	40x100 with Adjustable Subframe
	Material	Wood WPC Extrusion
	Finishing	Stain to Match Door Color

TBC brand and pattern later

1	926.60.706	BUT.HIN.STST.BL.MAT.102x76x2MM 2BB	4 PC	
2	911.83.687	PC WC. HDL SET 8 STST.BLM	1 SET	
3	950.07.717	DOOR SEAL PL.BROWN	6 M	
4	937.13.583/L 937.13.593/R	FRAME MOUNTED DOOR STOP (DIN Left-Right)	1 PC	

D06 = 12 set